IMPACT: International Journal of Research in Engineering & Technology (IMPACT: IJRET)
ISSN(P): 2347-4599; ISSN(E): 2321-8843
Special Edition, Jun 2017, 1-12
© Impact Journals

# ENERGY INTEGRATION OF SUGAR PRODUCTION PLANT USING PINCH ANALYSIS (A CASE STUDY OF SAVANAH SUGAR COMPANY NUMAN, NIGERIA)

**BARAMBU NAFIU UMAR, EL-NAFATY USMAN ALIYU & SAEED ISA AHMED**

Department of Chemical Engineering, Abubakar Tafawa Balewa University, Bauchi, Nigeria

## ABSTRACT

Energy integration is a subdivision of a wider field of process integration, which is an efficient approach that allows industries to increase their profitability through reduction in energy, water and raw materials consumption. Pinch analysis principally matches cold and hot process streams with a network of exchangers so that the demand for externally supplied utilities are minimized. The aim of the research is to use pinch analysis to integrate energy used in production plant of Savannah Sugar Company. Energy integration of Savannah Sugar Company was carried out, using pinch technology with HENSAD software. The minimum approach temperature of 7 $^{o}$C was used, the pinch point was found to be 114.5 $^{o}$C. The hot utility requirement for the traditional and pinch analysis approach were found to be 3258 kW and 2120 kW respectively (34.9% energy saved), while the cold utility requirement were found to be 102393 kW and 45500 kW respectively (55.56% energy saved). Hence the technology is an efficient tool that can help save cost and other resources when applied to process plants.

**KEYWORDS:** Energy Integration, HENSAD Software, Pinch Point, Pinch Analysis, Sugar

## 1. INTRODUCTION

Pinch analysis is a methodology for minimizing energy consumption of a process plant by maximizing the utilization of hot and cold utilities available within the process, thereby reducing the use of external utilities. It is also known as process integration, heat integration, energy integration or pinch technology. Energy conservation has become one of the most current concerns due to continuous increase in energy prices. Among process integration methodologies, pinch analysis is the most widely used. This is due to the simplicity of its underlying concepts and especially to the spectacular results it has obtained in numerous projects worldwide. Before the advent of pinch analysis, industrial equipment were designed and operated separately in terms of external utilities, with pinch analysis those process equipment can be incorporated in order to minimize the use of external utilities such as energy, hydrogen and water.

Process integration when combine with other tools such as process simulation or HENSAD (Heat exchanger network, simulation and design), is a powerful approach that allows engineers to systematically analyze industrial processes and the interaction between its various parts [1, 2, 3 and 4].

Pinch technology is a complete methodology derived from simple scientific principles by which it is possible to design new plants with reduced energy and capital costs as well as where the existing processes require modification to improve performance. Pinch Analysis also analyze the process data using its methodology to predict energy and other design targets such that it's possible to assess the consequences of a new design or potential modification before embarking on actual implementation [5 and 6]. Energy saving in the Nigerian industrial sector has several possibilities, due to the fact

that almost all the industrial equipment stocks in Nigeria were imported during the era of cheap energy. Consequently, they are inherently energy inefficient, the improvement of energy efficiency can provide substantial benefit in general to all sector of the economy of the process plants [7, 8, 9 and 10].

### 1.1 Overview of Savannah Sugar Company

Savannah Sugar Company being the only sugar factory in Nigeria, grows its sugarcane, harvest and transports the sugarcane to the factory. Process it into raw sugar and the final market product of refined sugar. The installed capacity of Savannah Sugar Company is 50,000 tons of refined sugar per annum and cane crushing rate of 4,000 tons per day.

The following sections of the sugar production plant are the main focus of the research.

- Juice clarification.
- Juice evaporation.
- Crystallization.

The mixed Juice from the mills is opaque/turbid and contain sucrose reducing sugars, organic and inorganic matter. It also contains insoluble matter in suspension (fine bagasse, soil etc.). The pH of the juice extracted from fresh cane is about 5.5 and can be as low as 4.0 if the cane is deteriorated or has reached the mills several days after harvest. This acidic pH (4.0-5.5) sucrose undergoes inversion reaction, where it is converted to its monomers (glucose and fructose) which cannot form crystals during crystallization and goes into molasses. Hence the need for proper juice clarification so as to remove all the impurities coming along with the juice become very imperative.

In Savannah Sugar Company the method of juice clarification employed is defecation which basically involves liming of the mixed juice and its subsequent heating. Fractional liming with double heating combines the advantages of cold and hot liming, it is the liming practice in Savannah Sugar Company. In this method, the mixed juice pH is raised from 5.0 to 6.5 by addition of milk of lime (cold liming) and the limed juice is pre-heated from ambient temperature to a temperature of 65 $^{o}$C in heater No.1, using vapor II bleed from the second effect evaporator as heating agent. The heated juice (at 65 $^{o}$C) is pumped to hot liming tank where the pH is raised to 8.0 by addition of milk of lime (Hot liming, 2$^{nd}$ stage of liming). The hot limed juice is heated to a temperature of between 103 $^{o}$C and 105 $^{o}$C in heater No. 2 and No. 3 respectively using vapor I bleed from the first effect evaporator and exhaust steam as make up [11].

The heated juice is pumped to the flash tank to allow the temperature of the juice to drop from 105 $^{o}$C to 96 $^{o}$C and also to get rid of gas bubbles contain in the juice to achieve better clarification. A flocculant (Talosep $A_3$) is added to the limed juice leaving the flash tank to clarifiers via the splitter box to enhance the production of large flocs in the mud. Mud with large flocs settles more rapidly. The settling of the juice takes place at the clarifiers, where the clear juice is continually withdrawn at the top and store in the clear juice tank. While the mud is withdrawn at the bottom and filtered in the rotary vacuum filters to reclaim the remaining juice for reprocessing and the filter cake send out as the second byproduct.

Clarified juice is concentrated into a syrup (60 brix) before it is sent to vacuum pans to be crystallized into raw sugar. The concentration is made in several evaporators connected in series called multiple effect. The juice travel from

one vessel/body to another with a decrease in juice boiling temperature because of the gradual increase of vacuum. In Savannah Sugar Company, quadruple effect evaporation is used with five evaporator bodies, two bodies in the first effect and the remaining effects have one body each. The clear juice is preheated in pre-heater to raise its temperature from 95 $^{o}$C to 110 $^{o}$C and a steady juice flow is maintain to the evaporators to prevent surges [11].

Exhaust steam pressure of 150 Kpa and temperature of 127 $^{o}$C is maintained in the 1$^{st}$ effect (evaporators No. 1A & 1B), with the juice entering at 14 to 15 brix while the discharge brix is 19.69. Also the vapour bled from these vessels is referred to as Vapour I with a temperature of 118 $^{o}$C, this vapour is used in the next evaporator body, juice heaters and pan station as heating source. Juice with 19.69 brix from the first effect flows into second effect evaporator through the discharge valve of evaporator 1B for further boiling and concentration at temperature of 118 $^{o}$C and pressure of 111 Kpa. Vapour bled from this vessel is at 103 $^{o}$C (vapour II) which is used in the next evaporator body and the heaters, the outlet juice brix is 26.26. From second effect evaporator, the juice is allowed to flow into third effect evaporator through the discharged valve of the second effect evaporator for further boiling and concentration to a juice brix of 39.42, using the vapour II. The vapor (Vapour III) generated has a temperature of 84 $^{o}$C and the juice allowed to flow into the fourth effect evaporator through the discharge valve of the third effect evaporator for further boiling and final concentration of the juice to a brix of between 60 to 65 brix using vapour III as heating source. The vapour generated from the fourth effect, vapour IV is at 53 $^{o}$C. Vapour IV is condensed at the evaporator condenser using injection water. The syrup obtained is pump to the pans station for second stage of evaporation before crystallization.

In crystallization or sugar boiling, the thick syrup from the multiple effect evaporator is transferred to a vacuum pan. A vessel in which syrup is boiled under vacuum to form a heavy mixture of crystals and the mother liquor called massecuite. Because a single crystallization does not recover all of the sucrose from the syrup, the mother liquor from a strike is recycled for recovery of additional sugar.

The aim of this study is to use pinch analysis to integrate energy use in sugar production plant with a special focus on Savannah Sugar Company, Numan, Nigeria.

This aim can be actualize through the realization of the following objectives:

- Construction of temperature interval, cascade and composite curve diagrams.
- Determination of hot utility requirement, cold utility requirement and pinch point.
- Identification of pinch rules violations if any in the existing process energy system.
- Modification of the heat exchanger network for maximum heat recovery and minimum utility consumption.

### 1.2 Similar Works

Studies similar to present work have been done by several people among which a few are listed below.

-B.P Lavarack worked on “Application of energy integration techniques (pinch technology) to reduce process steam consumption for raw sugar factory.” The concept that the efficiency with which steam and cooling water are used within the process industries depends strongly on the techniques of pinch technology employed. There are two techniques of pinch technology which are algebraic techniques (Uses temperature interval diagram to predict minimum cold and hot

utilities requirement) and graphical techniques (Uses composite curve diagram to predict minimum cold and hot utilities requirement) [12].

-Singh worked on "Using pinch technology to optimize evaporator and vapor bleed configuration at Malelane mill." Pinch analysis methodology was employed on the process streams of Malelane mill, stream data was then extracted as hot and cold streams according to analysis procedure and all process heating and cooling duties were reviewed. From the energy balance the hot and cold utility requirements was found to be 50800 kW and 189980 kW respectively. As the result of the integration the hot and cold utility requirements were reduced to 39700 kW (21.8% energy saved) and 150300 kW (20.88% energy saved) respectively [13].

-Gonzalez worked on "Energy integration of multi-effect evaporators in sugar process production." Energy integration and design approaches using pinch analysis methodology have been adopted to maximize heat recovery of multi-effect evaporators in sugar process production. All process heating duties were reviewed. The hot utility requirement of the process was obtained from the energy balance to be 23814.52 kW, however as the result of the integration it was reduced to 14973.6 kW (37.2% energy saved) [14].

## 2. MATERIALS AND METHODS

### 2.1 Material

The materials used include Process flow diagram, Operating manual of Savanah Sugar Company, Pinch analysis software (HENSAD), Streams data from Savannah Sugar Company and Computer set.

### 2.2 Method

The procedure involves process streams specification, data extraction and use of HENSAD software to design or simulate energy process system. In streams specification, the process was divided into hot and cold streams. A hot stream is a stream that needs to be cold to satisfy the process need while cold stream is a stream that needs to be heated up to satisfy process need. In data extraction, the mass flow rate, specific heat capacity, input and output temperature and film heat transfer coefficient for each stream was extracted and finally the heat exchanger network simulation and design were carried out.

### 2.3 Running of HENSAD software

The HENSAD software was ran by first starting up the menu. This was done by double clicking on the HENSAD software to display the startup menu, file from the tool bar was clicked, a new command was selected and appropriate units was chosen. Hot streams data page was displayed, the hot streams data were computed then followed by the selection of cold streams from the tool bar. The cold streams data page was displayed, the cold streams data were computed and return to main menu was clicked. System from the tool bar was selected and $\Delta T_{min}$ was computed. Worksheet from the tool bar was clicked to select summary of table which displayed the summary of the data provided. Worksheet from the tool bar was clicked again to select the following commands from the tool bar one after the other:

TI Diagram which displayed the TI (temperature interval) diagram, from which the possible heat transfer intervals were obtained.

Cascade diagram which displayed the cascade diagram, from which the pattern of heat transfer from heat surplus

to heat deficit intervals and the requirement of external utilities were obtained.

T-Q Diagram which displayed the T-Q (temperature- enthalpy) diagram, from which the pinch point, hot utility requirement, cold utility requirement and the possible heat recovery area were obtained.

Work sheet from the tool bar was clicked to select design above the pinch, from which the appropriate streams matching and network modification were performed. Also work sheet was clichéd again to select design below the pinch and appropriate stream matching and network modification were performed.

Figure 1 shows the procedure of pinch analysis using HENSAD software in a simple block diagram format.

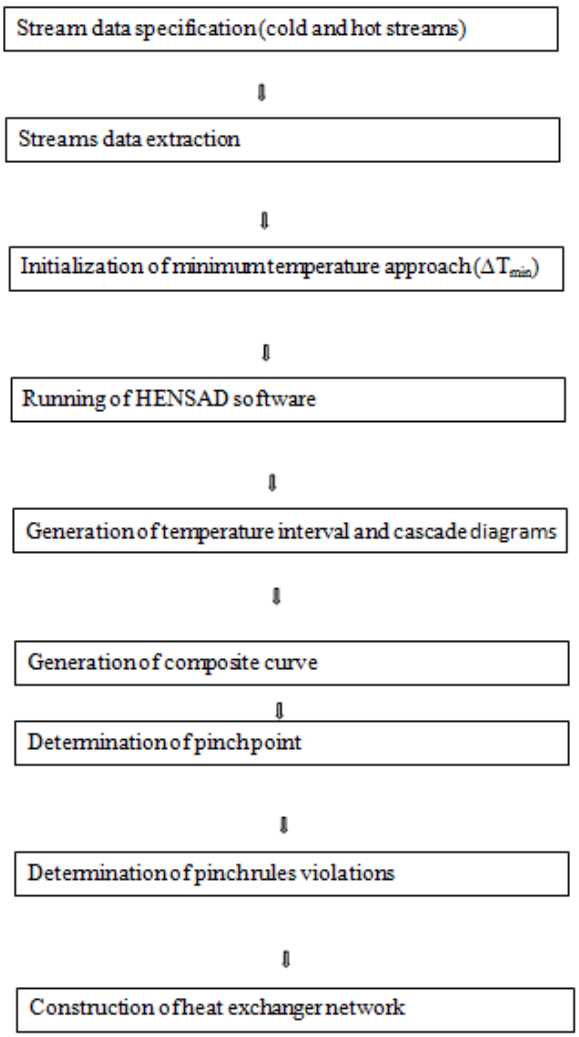


**Figure 1: Procedure of Pinch Analysis Using HENSAD Software**

## 3. RESULTS AND DISCUSSIONS

This section presents the results obtained using the data extracted from the operating manual of Savannah Sugar

Company.

The stream specification and data collection from the operating manual of Savannah Sugar Company were carried out for cold and hot steams as presented in Table 1.

**Table 1: Operating Data of Savannah Sugar Company, Numan, Nigeria**

| S/N | Stream Type | Stream Specification | Mass Flow Rates (kg/s) | Specific Heat Cap (kJ/kg/°C) | Temp in (°C) | Temp Out (°C) | Film Heat Transfer Coef ($W/m^2$ °C) |
|---|---|---|---|---|---|---|---|
| 1 | Hot | Vapour I | 24.50 | 127.20 | 118.00 | 103.00 | 1.67 |
| 2 | Hot | Vapour II | 12.48 | 92.02 | 103.00 | 84.00 | 1.17 |
| 3 | Hot | Vapour III | 10.22 | 35.27 | 84.00 | 53.00 | 0.79 |
| 4 | Hot | Juice from evap II | 53.00 | 3.66 | 118.00 | 104.00 | 0.17 |
| 5 | Hot | Juice from evap III | 43.94 | 3.53 | 104.00 | 82.00 | 0.33 |
| 6 | Hot | Juice from evap IV | 33.98 | 3.33 | 85.00 | 54.00 | 0.41 |
| 7 | Cold | Juice from heater I | 136.00 | 3.82 | 30.00 | 65.00 | 0.44 |
| 8 | Cold | Juice from heater II | 126.00 | 3.85 | 65.00 | 85.00 | 0.42 |
| 9 | Cold | Juice from heater III | 116.00 | 3.88 | 85.00 | 105.00 | 0.33 |
| 10 | Cold | Juice from evap pre-h | 106.00 | 39.94 | 95.00 | 110.00 | 0.16 |
| 11 | Cold | Juice from evap I | 78.88 | 3.84 | 110.00 | 118.00 | 0.17 |

Table 1 presents the operating data of Savannah Sugar Company, which was used to simulate and design the heat exchanger networks.

### 3.1 Outcome from HENSAD Software

Table 2 and 3 present data for construction of temperature interval diagram and composite enthalpy temperature diagram respectively using 7 °C as $\Delta T_{min.}$

Figure 2, 3 and 4 are the temperature interval diagram, cascade diagram and composite enthalpy diagram of Savannah Sugar Company respectively.

**Table 2: Data for Generating Temperature Interval Diagram**

| Number of Temperature Intervals = 13 | | | | |
|---|---|---|---|---|
| Interval | Temperature Range | | Excess Heat | Cumulative Q |
| | (°C) | (°C) | (kW) | (kW) |
| A | 125.0 | 118.0 | -2120. | -2120. |
| B | 118.0 | 117.0 | 3010. | 889.7 |
| C | 117.0 | 112.0 | 14476 | 15366 |
| D | 112.0 | 104.0 | 19566 | 34932 |
| E | 104.0 | 103.0 | 2406 | 37339 |
| F | 103.0 | 102.0 | 436.3 | 37775 |
| G | 102.0 | 92.00 | 8540. | 46315 |
| H | 92.00 | 85.00 | 5728 | 52044 |
| I | 85.00 | 84.00 | 7762 | 52821 |
| J | 84.00 | 72.00 | -140.2 | 52680 |
| K | 72.00 | 54.00 | -829.9 | 51850 |
| L | 54.00 | 53.00 | -159.0 | 51691 |
| M | 53.00 | 37.00 | -83.12. | 4337 |

**Table 3: Data for Composite Enthalpy - Temperature Diagram**

| Temperature (°C) | Hot Stream Enthalpy (kW) | Temperature (°C) | Cold Stream Enthalpy (kW) |
|---|---|---|---|
| 37.00 | .0000 | 30.00 | 45499 |
| 53.00 | .0000 | 46.00 | 53812 |
| 54.00 | 360.4 | 47.00 | 54331 |
| 72.00 | 8881 | 65.00 | 63683 |
| 84.00 | 14562 | 77.00 | 69504 |
| 92.00 | 24948 | 85.00 | 73385 |
| 102.0 | 37984 | 95.00 | 77880 |
| 103.0 | 39287 | 96.00 | 78747 |
| 104.0 | 42561 | 97.00 | 79614 |
| 112.0 | 69064 | 105.0 | 86551 |
| 117.0 | 85629 | 110.0 | 88639 |
| 118.0 | 88942 | 111.0 | 88942 |
| 125.0 | 88942 | 118.0 | 91062 |

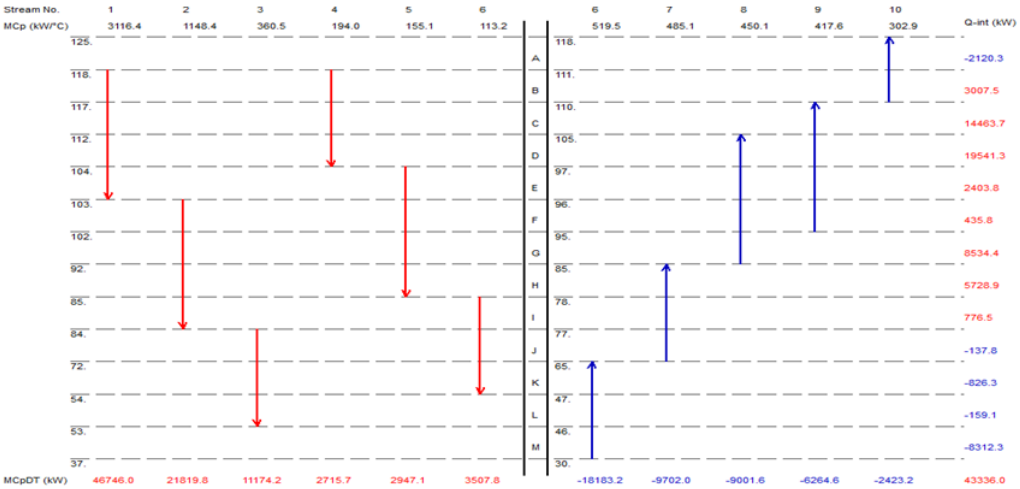


**Figure 2: Temperature Interval Diagram of Savannah Sugar Company**

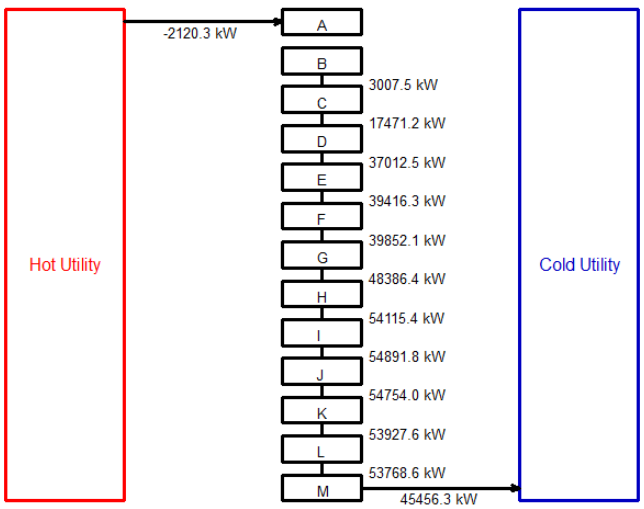

**Figure 3: Cascade Diagram of Savannah Sugar Company**

### 3.2 Temperature Interval Diagram and Cascade Diagram

The minimum driving force of 7 $^{o}$C between the hot and cold streams were used. A graph showing the temperature intervals for hot and cold streams were established (Figure 2). The left side is for the hot streams while the right side is for the cold streams. 13 intervals were used, which means there are 13 points from A to M with possibilities of heat transfer within the system. The streams with arrow pointed downward are hot streams, which means they have to be cooled to satisfy the process need. The streams with arrow pointed upward are cold streams, they have to be heated up to satisfy the process need. Table 2 tabulate the data for constructing temperature interval diagram. The intervals were gotten by shifted temperatures. The shifted temperatures were gotten by subtracting the $\Delta T_{min}$ from the input and output temperatures of the hot streams and maintaining the input and output temperatures of the cold streams. The temperatures were arrange in descending order. In each interval, heat from any hot streams were transferred to any of the cold streams in the interval.

In interval A, only stream 11 at the cool side were present and there is no any stream on the hot side to transfer heat to stream 11. Therefore, the energy requirement of stream 11 (-2120.3 kW) is the minimum hot utility requirement. Since there is no heat transfer across the interval A, therefore interval A is the pinch point. The upper temperature of interval A (118 $^{o}$C) is the hot pinch temperature while the lower temperature of interval A (111 $^{o}$C) is the cold pinch temperature. At pinch point, the system were divided into two segments, below the pinch and above the pinch segments. From Figure 2 interval A is the only interval in the above the pinch region while intervals B to M are on the below the pinch region. In interval B, streams one and four on the left side have the possibility of transferring heat to stream eleven on the right side. In interval C, streams one and four on the left side have the possibility of transferring heat to stream ten on the right side. Also from Figure 2, it can be seen that from interval B down to interval L there are streams on both sides.

This means there are streams on the left side with possibility of transferring heat to streams on the right side. But in interval M, only stream seven on the right side was present. This indicates that there must a temperature cross over in the design below the pinch. The temperature crossover has to be eliminated in order to get the minimum cold utility requirement of the process. Figure 3 (cascade diagram) shows how the system were cascaded into 13 cascades, from A to M. Heat transferred from the higher to the lower sub networks (Cascading). The heat surplus from higher temperature sub networks were used to satisfy the heat deficit of lower sub networks. The point where there is no heat transfer across the cascades is the pinch point. Therefore cascade A to B is the pinch point and has the heat deficit of 2120.3 kW which is the minimum hot utility requirement that can only be satisfied by external utility supply.

At the pinch point the system were divided into two region, above and below the pinch region. Cascade A is the only cascade in the above the pinch region while cascades B to M are in the below the pinch region. Below the pinch region heat transferred between the cascades (cascade B to M) and 45456.3 kW of heat were left and there were no any cascade with heat deficit to absorb the heat surplus left. Therefore the heat surplus of 45456.3 kW which was left is the minimum cold utility requirement of the system, which can also be externally supplied.

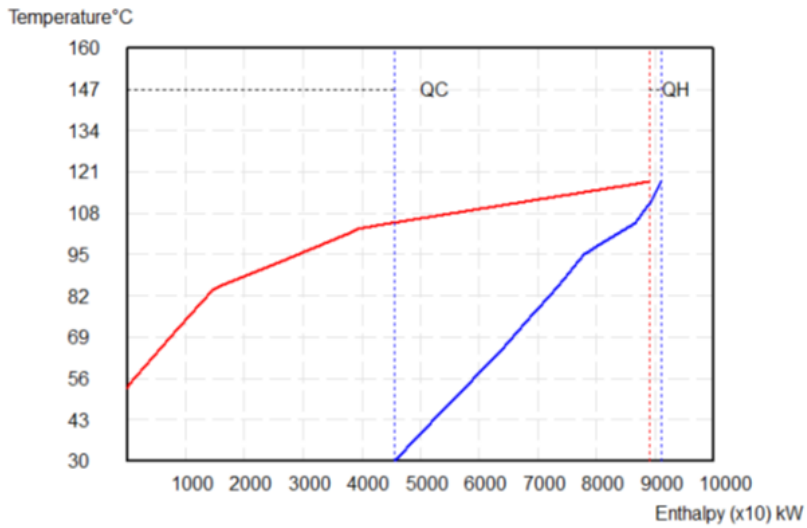


**Figure 4: Hot and Cold Composite Curve Diagram of Savannah Sugar Company**

### 3.3 Composite Curve

Table 3 tabulates the data for construction of the hot and cold composite curve. From Figure 4 the upper curve represents the hot streams composite curve while the lower curve represents the cold streams composite curve. The part of the hot streams composite curve that extends beyond the start of the cold streams composite curve cannot be cooled by heat recovery. Therefore is minimum cold utility requirement (45500 kW). The part of the cold streams composite curve that extends beyond the start of the hot streams composite curve cannot be heated by heat recovery. Therefore is the minimum hot utility requirement (2120 kW). The point where the two curves are closest is the pinch point and the corresponding temperature is the pinch temperature (114.5 $^{o}$C). Also from Figure 4 the hot pinch temperature was found to be 118 $^{o}$C and the cold pinch temperature was found to be 111 $^{o}$C. The minimum hot utility requirement, minimum cold utility requirement and the pinch point temperature were found to be 2120 kW, 45500 kW and 114.5 $^{o}$C respectively from both the temperature interval diagram, cascade diagram and composite curve diagram.

Comparison between the present operation of Savannah Sugar Company and the proposed upgrade shows that the hot utility requirement decreases from 3258 kW to 2120 kW (34.9% energy saved) and the cold utility requirement decreases from 102393 kW to 45500kW (55.6% energy saved). These inference is also shared by previous studies such as Singh *et al.*, 1997 [13]. The research worked on optimization of evaporator and vapour bleed configuration at Malelane mill using pinch technology. Malelane mill were optimized using ASPEN PINCH software.

The hot utility requirement and the cold utility requirement were found to be 39700 kW and 150300 kW respectively. Comparing the results of the present research and that of Singh *et al.*, 1997, shows that the present research is more economical to operate. This is because the present research includes the clarification and evaporation sections while Singh *et al.*, 1997 concentrated only on the evaporation section.

Also Gonzalez *et al.*, 2010 [14] worked on energy integration of multi-effect evaporators in sugar process production. The research were conducted using ASPEN PINCH software. The hot utility requirement were found to be

14973.6 kW. Also this research concentrated only on multi-effect evaporators steam economy, without incorporating the evaporation section with other sections.

### 3.4 Design Above and Below the Pinch

Figure 5 and 6 presents the exchanger network design for above and below the pinch respectively.

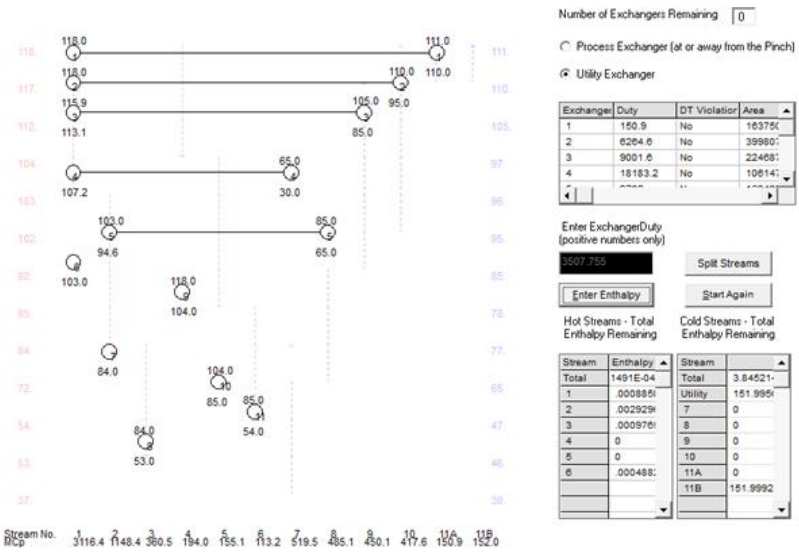


**Figure 5: Streams Matching (Heat Exchanger Network) for Design Below the Pinch**

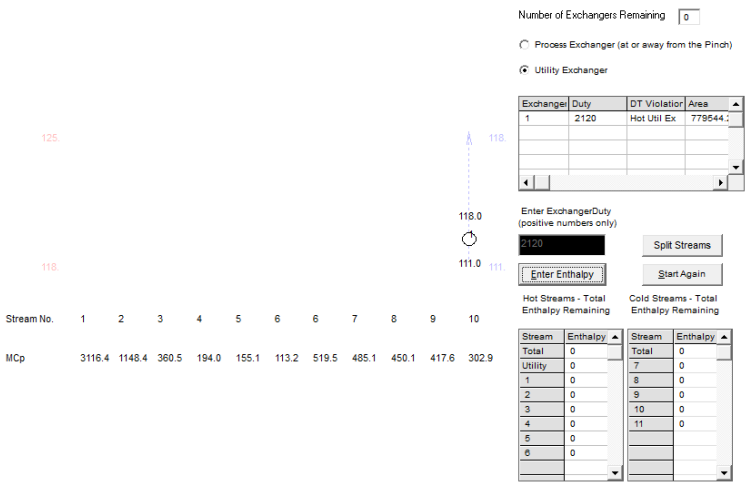


**Figure 6: Utility Network for the Design Above the Pinch**

Figure 5 shows how heat transfer between streams were established and pinch rules violations were eliminated for design below the pinch. Streams 1, 2, 3, 4, 5 and 6 have heat surplus of 46746.0 kW, 21819.75 kW, 11174.24 kW, 2715.72 kW, 2947.056 kW and 3507.755 kW respectively while streams 7, 8, 9, 10 and 11 have heat deficit of 18183.2 kW, 9702 kW, 9001.6 kW 6264.6 kW and 302.8992 kW respectively. In matching stream 1 with stream 11, Cp inequality and $\Delta T_{min}$ rules violations were observed and eliminated by splitting stream 11 into 11A and 11B. Therefore stream 1 was matched

with stream 11A by exchanger one with exchanger duty of 152.9 kW. Stream 1 was matched with stream 10 by heat exchanger two with exchanger duty of 6264.6 kW. Stream 1 was also matched with stream 9 by exchanger three with exchanger duty of 9001.6 kW. Stream 1 was also matched with stream 7 by exchanger four with exchanger duty of 18183.2 kW.

But stream 1 also left with surplus heat of 13143.7 kW which was absorbed by utility exchanger six in order to satisfy the process need without any violation. Stream 2 was matched with stream 8 by exchanger five with exchanger duty of 9702 kW, but stream 2 was left with heat surplus of 12117.78 kW which was absorbed by utility exchanger seven. Stream 3 has heat surplus of 11174.24 kW which was absorbed by utility exchanger eight. Streams 4, 5 and 6 have heat surplusof 2715.72 kW, 2947.056 kW and 3507.755 kW respectively and there was no any that require heat left, therefore the heat surplus of streams 4, 5 and 6 were absorbed by utility exchangers 9, 10 and 11 respectively. Figure 6 shows the utility network for design above the pinch.

Stream 11 was the only stream in the design above the pinch and to satisfy stream 11 demand 2120 kW, an external supply of utility was provided so as to satisfy the process need.

## 4. CONCLUSIONS

Energy integration of Savanah Sugar Company was carried out using 7 $^{o}$C as $\Delta T_{min}$ and the following conclusions were drawn

The temperature interval, cascade and composite curve diagrams were constructed using the data obtained from the operating manual of Savannah Sugar Company.

The hot utility requirement, cold utility requirement and pinch point were found to be 2120 kW, 45500 kW and 114.5 $^{o}$C respectively from the temperature interval, cascade and composite curve diagrams.

In matching stream 1 with stream 11, Cp inequality and $\Delta T_{min}$ rules violations were observed and eliminated by splitting stream 11 into 11A and 11B. The heat exchanger network for maximum heat recovery and minimum utility consumption were constructed and 1138 kW (34.9%) and 56893 kW (55.6%) were recovered from the hot and cold utility requirements.

The research concentrated on energy integration of sugar production plant. It is recommended to incorporate energy and water pinch analysis because the steam generation (energy source) depends on water.

## 5. ACKNOWLEDGEMENTS

We thank Engr. Richard Anekunu, process shift Engineer of Savannah Sugar Company for his suggestions, contributions and guidance.

## 6. REFERENCES

1. Linnhoff, B. (1994). Use pinch analysis to knock down capital costs and emissions. Chemical Engineering Progress, August, 1994: 33-57.
2. Sundmacher, K., Kienle, A. and Seidel-Morgenstern, A. (2005). Integrated Chemical Processes: Synthesis, Operation, Analysis and Control. Wiley-VCH, Weinhein, Germany.

3. Tjoe, T.N. and Linnhoff, B. (1986). Using pinch technology for process retrofit. *Chemical Engineering journal.*

4. Wunsch, H. (1998). Energy Saving Possibilities in the Sugar Industry, *Sugar Y Azucar*.

5. Ming Pan, Igor bulatov, Robin Smith and Jinkuk Kim. (2010). Improving energy recovery in heat exchanger network with intensified tube-side heat transfer.

6. Saleh M. A., Ali K. A., and Mohamed M. E. (2012). Energy Savings in Beet Sugar Factories by Adding Plate Evaporator Unit or Booster Evaporator System. *International conference on new role for the sugar economy in a changed political and economic environment.*

7. Dayo F.B. (2000). Auditing Energy Use in an Operating Plant, *Industrial Energy Management.*

8. Adejoh A.Z., Aloko D. F. and Muhammad I.J. (2013). Energy integration of vacuum distillation plant technology, Advances in applied science research, pp.264-265.

9. Kemp, I. C. (2011). Pinch analysis and process integration: a user guide on process integration for the efficient use of energy. Butterworth-Heinemann.

10. Shenoy, U. (1995). Heat Exchanger Network Analysis; Process Optimization by Energy and Resource Analysis. Gulf Publishing House, Houston, Texas.

11. Operating manual of Savannah Sugar Company, 2004.

12. Lavarack, B.P. (2006). Application of energy integration techniques (pinch technology) to reduce process steam consumption for raw sugar factory. *Proc. Aust. Soc. Sugar Cane Technol., Vol. 28.*

13. Singh, I., Riley, R. and Sellier, D. (1997). Using pinch technology to optimize evaporator and vapour bleed configuration at the Malelane Mill. *Proc. S. Afr. Sugar Tech. Assoc. 71: 207-216.*

14. Gonzatez, C. M. Verelst, H. and Gonzales, E. (2010). Energy integration of multi-effect evaporators in sugar process production.